Project Title: Design and Development of a Low-Cost 3D-Printed Hand Exoskeleton for Rehabilitation

BME 3200: Biomedical Systems Design Project

A project submitted to the Department of Biomedical Engineering in Third Year Second Semester

Supervised by

Name : Dr. G.M. Mahmudur Rahman

Designation : Assistant Professor

Dept. : BME

Submitted by

Name : Tasnim Anam Tusti

Roll No. : 2015015

Dept. : BME

Department of Biomedical Engineering

Khulna University of Engineering & Technology

Khulna-9203, Bangladesh

August 2025

Acknowledgement

Alhamdulillah, all praise is due to Allah (SWT), the Most Merciful and the Most Kind. I am deeply grateful to Allah for giving me the opportunity to acquire this knowledge and for giving me the patience, strength, and determination to complete this project. Without His guidance and mercy, nothing would have been possible.

My deepest gratitude goes to my beloved parents who, in their whole life, worked hard, sacrificing their wishes to fulfil their child's dream, living every single day of life cherishing a single dream, a dream of happiness and success for their child, who held me strong after each failure of my life. May Allah give me the strength to make them proud.

I am immensely grateful to my honorable supervisor, Dr. GM Mahmudur Rahman Sir, Assistant Professor in the Department of Biomedical Engineering, KUET, for his kind guidance, valuable feedback, and continuous support. He has been a great mentor, guiding, motivating, and supporting me whenever I needed it.

I extend my heartfelt thanks to FabLab, KUET, for providing access to 3D printing facilities, enabling the fabrication of the customized parts of the exoskeleton.

August, 2025

Author

Tasnim Anam Tusti

Abstract

Stroke survivors often experience difficulty in voluntary hand movements due to hand impairments. Most commercially available hand exoskeletons are typically expensive, making them unaffordable for patients in low-income countries, such as Bangladesh. To address this problem, this work presents a cost-effective, 3D-printed, fully wearable, portable, and easily customizable hand exoskeleton using locally available resources and simple technology. The model is designed in SOLIDWORKS. The device is employed with a rotary-encoder-based control system instead of biosensors to ensure operational reliability and consistent performance with minimal hardware complexity, particularly in rural areas. The hand exoskeleton has dual functionality: an assistive mode to support daily activities and a therapeutic mode for structured motor rehabilitation therapy sessions. Evaluation of the model through manual control and automated therapy sessions with a post-stroke patient demonstrated significant improvement in the finger range of motion (ROM) and gripping ability, ensuring its effectiveness for neurorehabilitation.

INDEX

CHAPTER 1	**Objectives**	6
	Introduction	6
CHAPTER 2	**Background Study**	7
	2.1 Literature Review	7
	2.2 Motivation	7
CHAPTER 3	**Materials and Methods**	9
	3.1 Design Specifications	9
	3.2 Mechanical Design of the Model	9
	3.3 Components Description	13
	3.4 Control System	14
	3.5 Fabrication and Assembly	16
CHAPTER 4	**Experimental Result**	17
	4.1 Experimental Results from the Manual Control Test	17
	4.2 Experimental Results from the Automatic Therapy Test	18
CHAPTER 5	**Discussion**	20
CHAPTER 6	**Conclusion and Future Work**	21
	References	22
	Appendix	23

LIST OF TABLES

Table No.	Description	Page
I	Measured phalanx lengths of the patient's fingers and corresponding exoskeleton segment lengths	12
II	Measured phalanx lengths and corresponding exoskeleton segment lengths for the little finger and thumb	12
III	Components used to implement the proposed model	13
IV	Values of the pre-therapy ROM of the finger joints of the patient	18
V	Normal values of ROM of the finger joints of a healthy adult	18
VI	Values of the post-therapy ROM of the finger joints of the patient	19
VII	Values of the post-therapy ROM of the finger joints of the patient	20

LIST OF FIGURES

Figure No	Description	Page
1	3D rendered view of the model's ring finger assembly and backhand platform	10
2	3D rendered view of the model's little finger assembly and backhand platform	10
3	Joints of the fingers of a human hand	11
4	3D rendered view of the model's thumb finger assembly	11
5	3D rendered view of the model's four finger assembly	13
6	Circuit diagram of the control system	14
7	Operational workflow of the hand exoskeleton model	15
8	Assembled hand exoskeleton	16
9	Gripping test: (a) heavy weighted cylindrical object grasp, (b) light weighted cylindrical object grasp, (c) spherical object grasp, (d) cuboid object grasp, (e) hook grip, and (f) card grip	17
10	3D rendered view of the model's four finger assembly	19

Chapter 1

Objectives

The objectives of this project are as follows-

1) To develop a cost-effective, 3D-printed hand exoskeleton that enables functional hand rehabilitation for stroke-affected individuals and is affordable for patients in rural and low-resource settings.
2) To develop a dual-mode device that functions both as a therapeutic device for structured rehabilitation and as an assistive device for daily activities.
3) To implement a biosignal-independent, rotary-encoder control system-based hand exoskeleton ensuring reliable, user-friendly operation without complex hardware.

Introduction

Stroke is one of the major global causes of motor impairments, affecting around 15 million individuals annually [1]. Stroke commonly results in loss of voluntary hand movement control, also known as a cerebrovascular accident (CVA). Over 40% of survivors experience persistent weakness in the upper limb contralateral to the affected side of the brain, typically due to damage to the motor cortex [2]. Post-stroke patients typically lose up to 82% of their grip strength and 88% of their finger extension ability [3], often leading to a characteristic clenched hand posture, which can make it difficult for stroke survivors to perform everyday tasks like eating, bathing, and dressing. With appropriate therapy and consistent repetitive movements, the central nervous system can undergo neuroplastic reorganization, enabling patients to regain motor function in the impaired limb. Traditional physical therapy requires one-to-one sessions with a therapist, which can be time-consuming and expensive. As a result, many patients are unable to receive the amount of therapy they need. Nowadays, rehabilitation devices have been proven more efficient in restoring impaired limb functions, with 3D-printed models providing cost-effective, customizable alternatives for post-stroke patients requiring personalized therapy [4].

Chapter 2

Background Study

2.1 Literature Review

D. Esposito *et al.* [4] presented a 3D-printed, underactuated hand exoskeleton where a single servo motor was used to move only four fingers via a back-hand transmission shaft. In this study, force-sensitive resistor (FSR) sensors were utilized with force myography (FMG) to detect voluntary muscle contractions, including both opening-closing and proportional control options. In this model, the thumb remained fixed in either the adduction or abduction position with limited degrees of freedom (DOF), thereby restricting full hand rehabilitation. Abdallah *et al.* [5] designed a 3D-printed EMG-controlled hand exoskeleton for full hand rehabilitation using surface electromyography (EMG) sensors to detect muscle activity from the flexor and extensor muscles. They processed the extracted EMG features (MAV2, RMS) through Arduino MEGA for force estimation. However, the system's reliance on the user's muscle strength restricted its effectiveness for patients in the early stages of rehabilitation. In another study [6], the authors developed a bilateral hand exoskeleton using flex sensors on the healthy hand to detect finger movements, which were wirelessly transmitted to control actuators on the impaired hand. Nevertheless, the design used in this study relied on open-loop control, which limited its precision and adaptability. Heung *et al.* [7] proposed a soft robotic hand that was 3D printed. The core innovation of this model lay in the Soft-Elastic Composite Actuator (SECA) mechanism, which enabled finger flexion and extension using a single pressurization source. In this study, the system integrated user intention via EMG and electroencephalography (EEG) signals to improve hand functionality. Despite its effectiveness, the reliance on external pressurization and multiple pneumatic components resulted in a bulky, non-portable setup, limiting its suitability for home-based rehabilitation and use in low-resource settings. McConnell *et al.* [8] proposed a tendon-driven exoskeleton in which two motors were used for finger flexion and extension, along with strain gauges for feedback. However, the model's rehabilitation precision was limited due to reduced tracking accuracy from the strain gauge sensitivity and the glove's flexibility.

2.1 Motivation

Our present work aims to develop a cost-effective, easily customizable, 3D-printed hand exoskeleton designed to assist post-stroke patients in impaired hand rehabilitation. In the proposed model, each finger, including the thumb, can move precisely and in synchronization through servo-driven articulated mechanisms. The device is employed with a rotary-encoder-based control

system, as signal reliability issues and hardware limitations often hinder the use of biosensors in low-resource regions, such as rural areas of Bangladesh. It ensures enhanced DOF, like natural hand, and enables full hand rehabilitation. The mechanical parts were designed using SOLIDWORKS and fabricated using polylactic acid (PLA) material via 3D printing, ensuring both cost-effectiveness and ease of customization. The developed model emphasizes not only the cost-effectiveness of rehabilitation but also enables patients to independently perform repetitive grasping and releasing exercises.

Chapter 3

Materials and Methods

3.1 Design Specifications

The development of the model took into account the following design criteria:

1) The parts should be mostly 3D printed with PLA to ensure low-cost production, easy maintenance, and easy customization based on the patient's needs.
2) The exoskeleton should provide numerous degrees of freedom (DOF) and a wide range of motion (ROM) to mimic the natural hand.
3) The model should rest on the dorsal side of the paretic hand, keeping the palmar surface and fingers free. This placement helps maintain a natural grip on objects and offers a comfortable grasp without requiring complicated controls.
4) The actuator should supply sufficient torque to extend a paretic hand.
5) The patient should be able to control both opening and closing of the hand through a rotary encoder.

3.2 Mechanical Design of the Model

The model was designed with SOLIDWORKS. The exoskeleton model has a backhand platform (customized to fit on an adult's left hand), which rests on the dorsal side of a hand shown in Fig. 1. The platform houses the actuator, servo motor, and Arduino UNO board. The parts shown in Fig. 1 (actuator arm, arm 1, arm 2, arm 3, arm 4, arm 5, proximal phalanx support, medial phalanx support, and distal phalanx support) are designed to support the index, middle, and ring fingers. Each of these fingers of the exoskeleton has three DOF, allowing the metacarpophalangeal (MCP), proximal interphalangeal (PIP), and distal interphalangeal (DIP) joints to move.

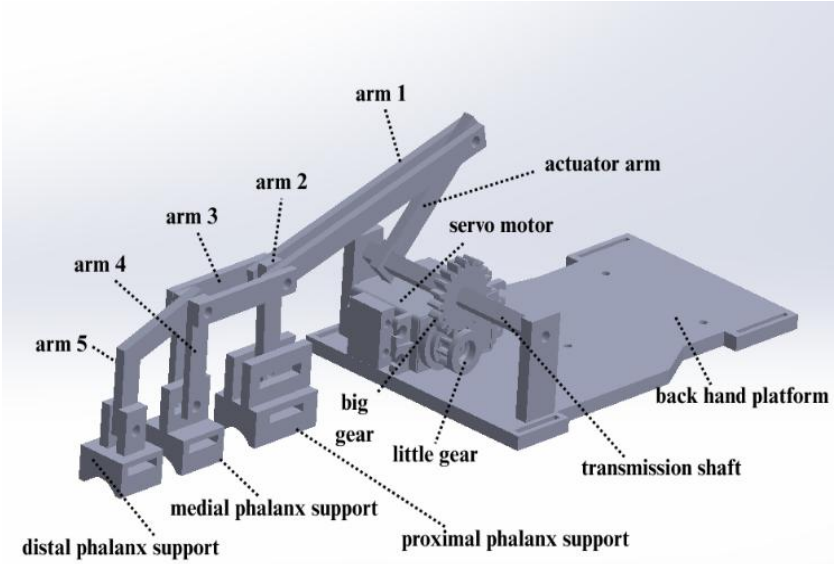

Fig. 1. The patient should be able to control both opening and closing of the hand through a rotary encoder.

The parts shown in Fig. 2 (little finger (LF) actuator arm, LF arm 1, LF arm 2, LF arm 3, LF proximal phalanx support, and LF distal phalanx support) are designed to support the little finger. It ensures two DOF, allowing the MCP and PIP joints to move.

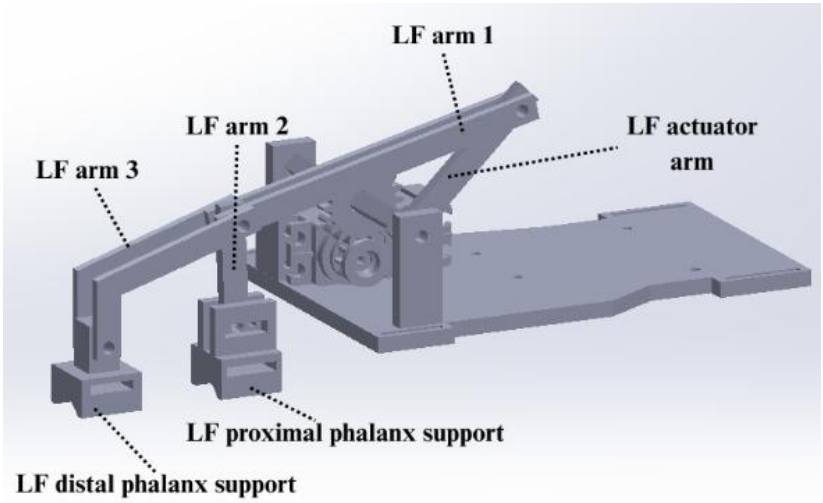

Fig. 2. 3D rendered view of the model's little finger assembly and backhand platform.

The finger joints of a human hand, along with their anatomical arrangement, are shown in Fig. 3.

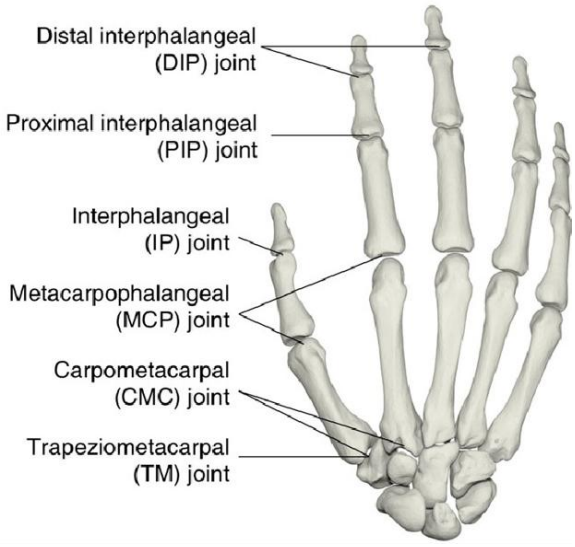

Fig. 3. Joints of the fingers of a human hand [12].

The customized parts shown in Fig. 4 (Thumb base platform, T (thumb) arm 1, T arm 2, T arm 3, T arm 4, T actuator arm, proximal phalanx support, and distal phalanx support) are designed to support the thumb of the exoskeleton, which provides two DOF, allowing the MCP and interphalangeal (IP) joints to move. The full model ensures a total of 13 DOF. The exoskeleton can be easily used on the right hand by simply switching the positions of the little and index fingers. However, the thumb must be redesigned to be symmetrical on the right-hand side.

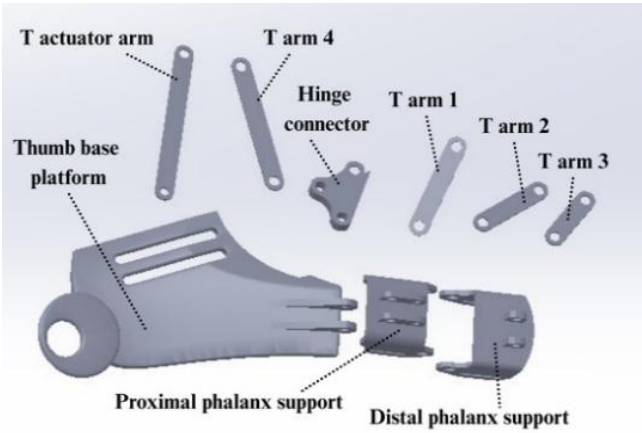

Fig. 4. 3D rendered view of the model's thumb finger assembly.

To ensure the precise alignment of each exoskeleton segment with the user's finger joints, anatomical measurements of the phalanges were taken from the impaired left hand of a post-stroke patient. Measurements were taken between the finger joints. Utilizing these values, the exoskeleton segments were designed with SOLIDWORKS to correspond with the phalanx dimensions. The remaining parts were designed based on these measurements. The length of the actuator arm was set at 5 cm. Each exoskeleton segment was designed to be approximately 0.5 cm longer than the corresponding phalanx length to accommodate the necessary bolts and nuts for secure mechanical assembly. The design approach ensured accurate alignment with the joints and ensured smooth finger motion during actuation.

TABLE I. MEASURED PHALANX LENGTHS OF THE PATIENT'S FINGERS AND CORRESPONDING EXOSKELETON SEGMENT LENGTHS

Finger	**Index (cm)**	**Middle (cm)**	**Ring (cm)**
Proximal phalanx length (MCP-PIP)	4.5	5	4.5
Exoskeleton proximal effective length (arm 1- actuator arm)	5	5.5	5
Middle phalanx length (PIP-DIP)	3.5	4	3.5
Exoskeleton middle segment (arm 3) length	4	4.5	4
Distal phalanx length (DIP-finger tip)	3	3.5	3
Exoskeleton distal segment (arm 5) length	3.5	4	3.5

TABLE II. MEASURED PHALANX LENGTHS AND CORRESPONDING EXOSKELETON SEGMENT LENGTHS FOR THE LITTLE FINGER AND THUMB

Phalanx length and exoskeleton segment length (cm)	**Proximal phalanx length (MCP-PIP) (cm)**	**Exoskeleton proximal segment effective length (LF arm 1- actuator arm) (cm)**	**Middle + Distal phalanx length (PIP-finger tip) (cm)**	**Exoskeleton segment length (LF arm 3) (cm)**
Little finger	4	4.5	5	5.5
Phalanx length and exoskeleton segment length (cm)	**Proximal phalanx length (MCP-PIP) (cm)**	**Exoskeleton segment length (T arm 1) (cm)**	**Distal phalanx length (IP -finger tip) (cm)**	**Exoskeleton segment length (T arm 2) (cm)**
Thumb	3	3.5	2.5	3

A 360-degree MG996R servomotor is used to control the movement of the four fingers of the model, except the thumb, shown in Fig. 1. To boost the torque, a little gear with 10 teeth (input gear) is mounted on the servomotor's output shaft and is paired with a 20-tooth big gear (output gear). The mechanical advantage (MA) or the transmission ratio (R) is calculated by the gear teeth ratio, which is 2 in this model.

$$R = \frac{\text{Number of teeth on output gear}}{\text{Number of teeth on input gear}} = \frac{20}{10} = MA = 2$$

This setup allows the transmission shaft to rotate 180 degrees (servo angle/R = 360º/2). Each of the four fingers, except the thumb, is connected with an actuator, which is firmly attached to the transmission shaft shown in Fig. 5. The movement of the thumb is controlled by a separate mini SG90 servo. Therefore, this gear setup provides efficient torque transmission and necessary angular movement.

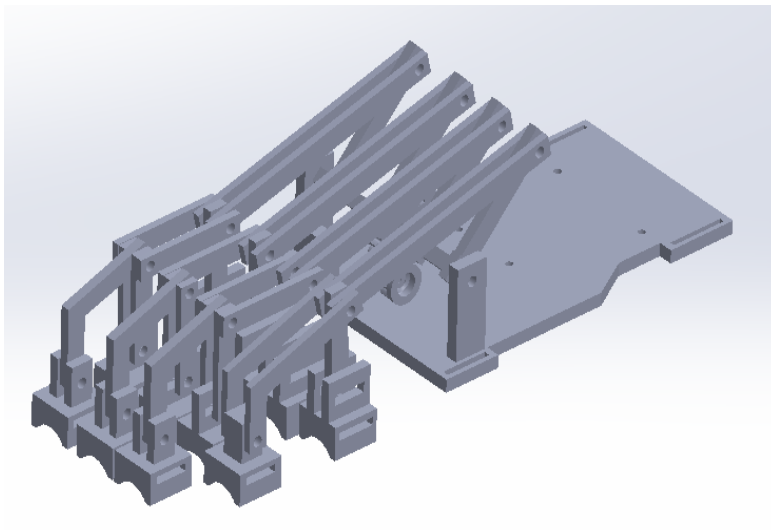

Fig. 5. 3D rendered view of the model's four-finger assembly.

3.3 Components Description

TABLE III. COMPONENTS USED TO IMPLEMENT THE PROPOSED MODEL

Component	Specification	Quantity	Cost (BDT)
Arduino UNO	Microcontroller, 5V	1	550
Servo Motor	MG996R, 360 Degree, 4.8V-7.2V; SG90, 360 Degree, 5V	2	600
Liquid Crystal Display (LCD)	16x2 blue backlight, 5V	1	150
I2C module	5V	1	90
Rotary encoder	KY-040, 5V	1	120
Mini power bank	5V, 6200mAh	1	250
Push button	4 pins	1	5
3D printed parts	200g, white PLA, 50% infill density	---	400
Connecting wires	---	As required	20
Adhesive straps	---	As required	20
Nuts and bolts	---	As required	45

Table III represents the hardware components used in the proposed model.

1) Arduino Uno: The Arduino Uno functions as the main control unit of the model. The rotary encoder's input is read by the Arduino Uno, and the servo angle is controlled.
2) 3D printed parts: By assembling the 3D printed parts, the exoskeleton is made. These parts support the hand and the fingers to improve grip and finger movement.
3) Mini power bank: The system is powered by a 5V mini power bank. It ensures the model's portability and rechargeability.
4) Servo motor: Two servo motors (MG996R for four fingers and SG90 for thumb) are programmed via Arduino Uno. They rotate based on the input from the rotary encoder.
5) Rotary encoder: The rotary encoder sends a digital signal as it is rotated, which can be read by the Arduino Uno. The servo angle is controlled by the rotation of the rotary encoder.
6) LCD and I2C module: The LCD is connected to the I2C module. The current angle of the servo is shown on the LCD.
7) Push button: The push button is used to switch between manual control mode and automatic therapy mode by resetting the Arduino.

3.4 Control System

The movement of the exoskeleton is controlled by the circuit shown in Fig. 6.

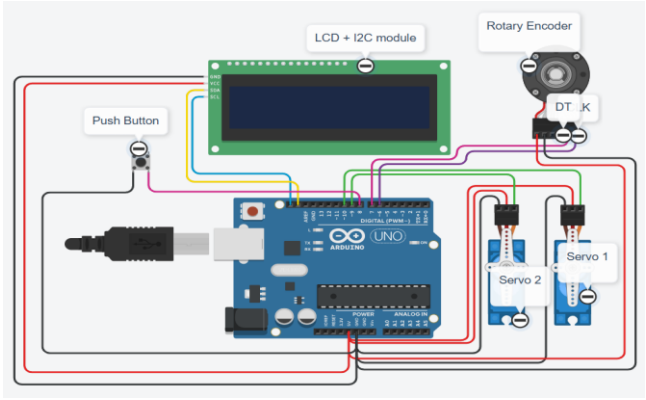

Fig. 6. Circuit diagram of the control system.

The hand exoskeleton model can be operated in two distinct modes: manual control mode and automatic therapy mode. In manual control mode, it functions as an assistive device, allowing users to regulate the movement of the exoskeleton fingers through the rotation of the rotary encoder. In automatic therapy mode, it operates as a rehabilitative therapeutic device, delivering consistent and repetitive opening-closing of the hand exoskeleton fingers through automated actuation. The modes can be switched by pressing the push button. Patients can do it easily by using their healthy hand. The detailed operational workflow of the hand exoskeleton is depicted in the following flowchart, shown in Fig. 7.

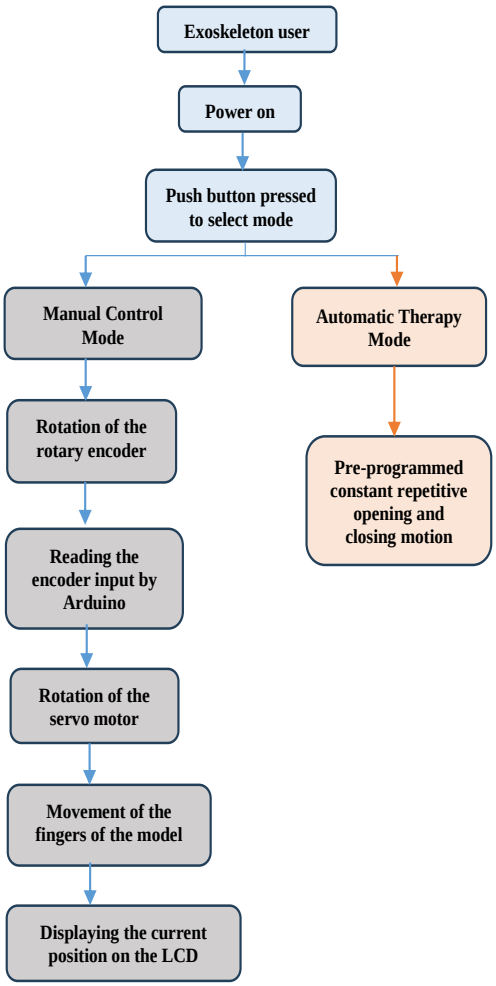

Fig. 7. Operational workflow of the hand exoskeleton model.

3.5 Fabrication and Assembly

The customized parts of the exoskeleton were 3D-printed at FabLab, using white PLA material with a 50% infill density to improve structural integrity. These parts were assembled using small nuts and bolts, as shown in Fig. 8. The control circuit was placed on the exoskeleton's backhand platform using nuts, bolts, and glue. The SG90 mini servo was attached to the thumb with glue to control the precise movement of the thumb. The full model can be securely fastened to the dorsal side of the hand and fingers using adhesive straps.

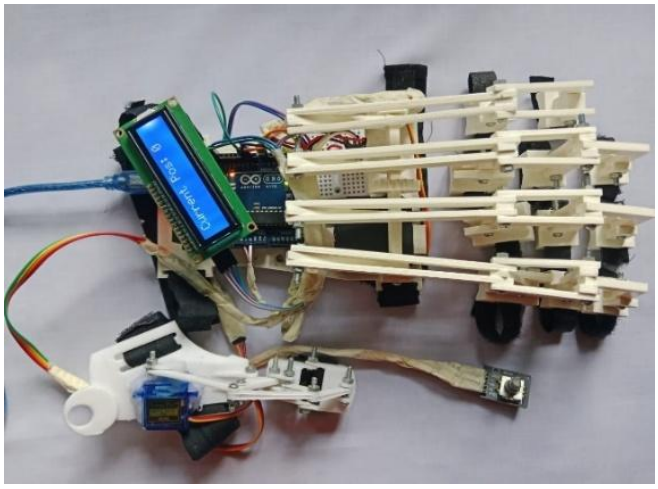

Fig. 8. Assembled hand exoskeleton.

Chapter 4

Experimental Result

To evaluate the performance of the model, two experiments were conducted on a post-stroke patient with an impaired hand (left hand) with proper consent.

4.1 Experimental Results from the Manual Control Test

The patient was suffering from difficulty in left-hand movement, such as flexion and extension of all fingers to grip an object. In the manual control gripping test, the patient successfully grasped different types of objects without any difficulty by rotating the rotary encoder with her healthy hand, shown in Fig. 9.

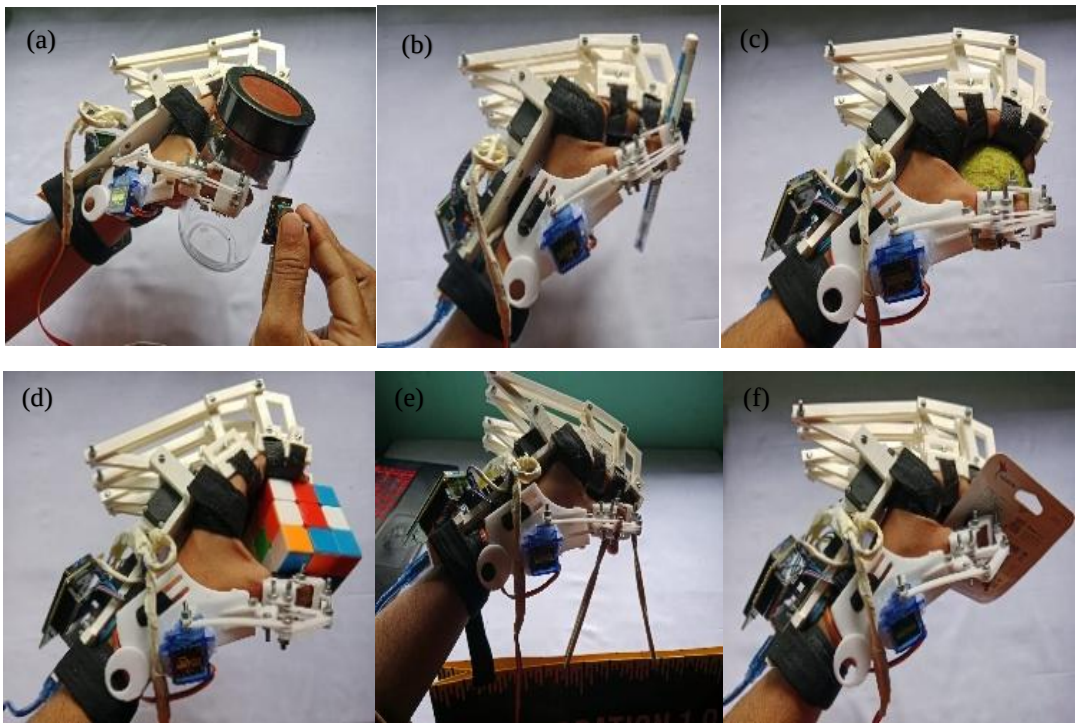

Fig. 9. Gripping test: (a) heavy weighted cylindrical object grasp, (b) light weighted cylindrical object grasp, (c) spherical object grasp, (d) cuboid object grasp, (e) hook grip, and (f) card grip.

4.2 Experimental Results from the Automatic Therapy Test

The patient underwent a month-long therapy using the automatic therapy mode of the hand exoskeleton. The therapy test was conducted at the patient's home. During this period, the patient used the hand exoskeleton for at least one to two hours daily. The therapy involved constant automated opening and closing of the fingers for a certain period. Before taking the therapy, the ROM (flexion and extension angle) of the finger joints of the patient was measured using a goniometer, listed in Table IV.

TABLE IV. VALUES OF THE PRE-THERAPY ROM OF THE FINGER JOINTS OF THE PATIENT

Joints of fingers	**MCP (°)**	**PIP (°)**	**DIP (°)**
Index finger's ROM	[-45, -10]	[-75, -30]	[-50, -20]
Middle finger's ROM	[-50, -20]	[-65, -20]	[-40, -20]
Ring finger's ROM	[-60, -20]	[-70, -15]	[-60, -20]
Little finger's ROM	[-50, -15]	[-65, -10]	[-55, -15]
Joints of the thumb	**CMC (°)**	**MCP (°)**	**IP (°)**
Thumb's ROM	[-30, -15]	[-25, -20]	[-60, -15]

The pre-therapy ROM of the fingers of the patient, listed in Table IV, was significantly lower compared to the normal values of ROM of the fingers of a healthy adult listed in Table V.

TABLE V. NORMAL VALUES OF ROM OF THE FINGER JOINTS OF A HEALTHY ADULT [9]

Joints of fingers (index, middle, ring, little)	**MCP (°)**	**PIP (°)**	**DIP (°)**
ROM	[-90, 30]	[-115, 0]	[-90, 20]
Joints of the thumb	**CMC (°)**	**MCP (°)**	**IP (°)**
ROM	[-50, 0]	[-55, 0]	[-90, 0]

After a month-long therapy, the finger's ROM of the patient was again measured using a goniometer, listed in Table VI. The post-therapy results showed a significant improvement in ROM. The patient was able to achieve better grasping ability after the therapy. The therapy was conducted on a single patient due to the limited availability of patients with unilateral hand impairment in the rural area where the study was carried out. However, finding suitable candidates in this rural area has proven challenging, as unilateral impairments of this nature are quite rare. Additionally, many patients are unwilling to take part in follow-up data collection due to a lack of understanding of the research process. Despite these challenges, we are currently applying the therapy with another patient and actively collecting data, which is an ongoing effort.

TABLE VI. VALUES OF THE POST-THERAPY ROM OF THE FINGER JOINTS OF THE PATIENT

Joints of fingers	**MCP (°)**	**PIP (°)**	**DIP (°)**
Index finger's ROM	[-50,-05]	[-95, -15]	[-70, -10]
Middle finger's ROM	[-65, -10]	[-75, -10]	[-60,-05]
Ring finger's ROM	[-80, -05]	[-80, -10]	[-75, -10]
Little finger's ROM	[-70, -10]	[-75, -05]	[-80, -05]
Joints of the thumb	**CMC (°)**	**MCP (°)**	**IP (°)**
Thumb's ROM	[-20, -05]	[-35, -10]	[-70, -10]

Fig. 10 shows the progression of the patient's ROM after a month-long therapy using the hand exoskeleton. $\theta 1$, $\theta 2$, $\theta 3$ denote the ROM at the MCP, PIP, and DIP joints for the index, middle, ring, and little fingers. For the thumb, $\theta 1$, $\theta 2$, $\theta 3$ correspond to the ROM at the carpometacarpal (CMC), MCP, and IP joints. The bar chart shows a significant improvement in post-therapy ROM for all joints. It indicates the enhanced finger flexibility and improved hand function after using the hand exoskeleton.

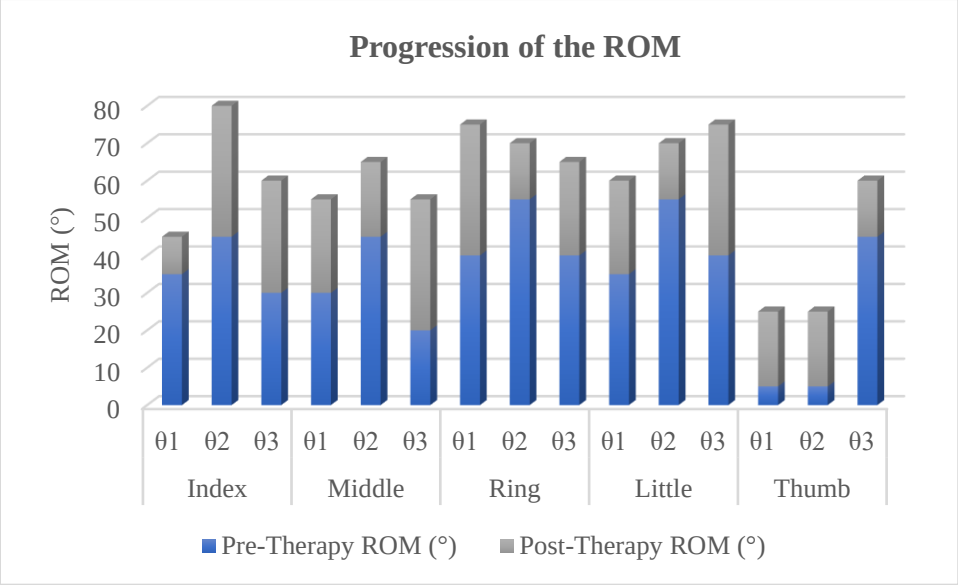

Fig. 10. Progression of the ROM after therapy.

Chapter 5

Discussion

The proposed hand exoskeleton developed in this study could help post-stroke patients with an impaired hand in daily living activities and aid in neurorehabilitation. The device is easily customizable, inexpensive, and lightweight (only 550g with the power bank). Patients can easily use the hand exoskeleton at home as it is portable and completely wearable. It provides a total of 13 DOF, enabling more naturalistic hand motion and full hand rehabilitation. In manual control mode, the exoskeleton functions as an assistive device, enabling patients to control finger movements to grip objects using the rotary encoder with their healthy hand. In automatic therapy mode, it operates as a rehabilitative therapeutic device. Because repetitive finger movements provided by the hand exoskeleton in the automatic therapy mode stimulate brain plasticity, improve neurorehabilitation by recovering motor functions, and enhance joint flexibility [10]. The use of the device significantly enhanced the post-stroke patients' finger ROM and gripping ability. Our developed hand exoskeleton model provides enhanced functionality at a very low price (only 2250 BDT) compared to previously existing models, listed in Table VII, making it affordable for the patients in a developing country like ours.

TABLE VII. COMPARISON TABLE OF OUR MODELLED HAND EXOSKELETON WITH OTHER TYPES OF HAND EXOSKELETON

Types of hand exoskeleton	**Price**	**Key features**	**Limitations**	**Ref.**
3D-printed soft robotic hand exoskeleton	230000 BDT (~$2000)	3D-printed with silicone, relied on multiple pneumatic components, EMG and EEG-controlled	Bulky setup, not fully portable, Unsuitable for home use, Impractical for low resource settings, and very expensive	[7]
Soft robotic glove	234000 BDT ($2000)	Comfortable, portable, remote-controlled	Not easily customizable, very expensive, supports only 3 fingers, and unsuitable for full hand rehabilitation	[11]
Our modelled hand exoskeleton	2250 BDT (~$20)	3D-printed with PLA, lightweight, customizable, wearable, portable, controlled via rotary encoder, independent of biosignal (EMG, EEG) reliability, supports all five fingers, suitable for home use in both assistive and rehabilitative applications, and cost-effective		

Chapter 6

Conclusion and Future Work

In this work, a low-cost 3D-printed hand exoskeleton with a rotary-encoder-based control system has been developed for the rehabilitation of one impaired hand, especially for post-stroke patients in low-resource settings. The model offers a highly customizable and portable solution by utilizing locally accessible materials and simple technology. The device has shown notable results in enhancing the patient's finger ROM, highlighting its potential in neurorehabilitation. The deployment of a rotary-encoder-based control system boosts the model's accessibility while contributing to its cost-effectiveness. This budget-friendly exoskeleton serves as a promising alternative to expensive rehabilitation devices, making it a viable option for improving the quality of life for stroke survivors in rural areas. The design is currently tailored for adults, requiring adjustments for children with atypical hand sizes. However, the model has limited flexibility and grasp precision, as it is 3D-printed with PLA. These issues need to be addressed in future versions, with a focus on enhancing flexibility, improving grasp precision, ensuring better performance in diverse conditions, and enhancing overall user experience with an advanced control system.

References

[1] World Health Organization, "Stroke, Cerebrovascular accident," *WHO EMRO.* [Online]. Available: https://www.emro.who.int/health-topics/stroke-cerebrovascular-accident/index.html. [Accessed: May 8, 2025].

[2] S. M. Hatem, G. Saussez, M. della Faille, V. Prist, X. Zhang, D. Dispa, and Y. Bleyenheuft, "Rehabilitation of motor function after stroke: A Multiple Systematic Review Focused on Techniques to Stimulate Upper Extremity Recovery," *Frontiers in Human Neuroscience*, vol. 10, P. 442, Sep. 2016.

[3] K. M. Triandafilou and D. G. Kamper, "Investigation of hand muscle atrophy in stroke survivors," *Clinical Biomechanics*, vol. 27, no. 3, pp. 268–272, Mar. 2012.

[4] D. Esposito, J. Centracchio, E. Andreozzi, S. Savino, G. D. Gargiulo, G. R. Naik, and P. Bifulco, "Design of a 3D-Printed Hand Exoskeleton Based on Force-Myography Control for Assistance and Rehabilitation," *Machines*, vol. 10, no. 1, p. 57, Jan. 2022.

[5] I. B. Abdallah, Y. Bouteraa, and C. Rekik, "Design and Development of 3D Printed Myoelectric Robotic Exoskeleton for Hand Rehabilitation," *International Journal on Smart Sensing and Intelligent Systems*, vol. 10, no. 2, p. 341, Jan. 2017.

[6] M. A. Rahman and A. Al-Jumaily, "Design and Development of a Hand Exoskeleton for Rehabilitation Following Stroke," *Procedia Engineering*, vol. 41, pp. 1028–1034, 2012.

[7] K. H. L. Heung, Z. Q. Tang, L. Ho, M. Tung, Z. Li, and R. K. Y. Tong, "Design of a 3D Printed Soft Robotic Hand for Stroke Rehabilitation and Daily Activities Assistance." in *2019 IEEE 16th international conference on rehabilitation robotics*, Toronto, Canada: IEEE, Jun. 2019, pp. 65-70.

[8] A. McConnell, X. Kong, and P. A. Vargas, "A novel robotic assistive device for stroke-rehabilitation," in *The 23rd IEEE International Symposium on Robot and Human Interactive Communication,* Edinburgh, Scotland, UK: IEEE, Aug. 2014, pp. 917-923.

[9] PHYSIOTUTORS, "Wrist/Hand Active Range of Motion (AROM) | Basic Assessment," *Physiotutors.* [Online]. Available: https://www.physiotutors.com/wiki/wrist-hand-active-range-of-motion/. [Accessed: May 8, 2025].

[10] M. Maier, B. R. Ballester, and P. F. M. J. Verschure, "Principles of Neurorehabilitation After Stroke Based on Motor Learning and Brain Plasticity Mechanisms," *Frontiers in Systems Neuroscience,* vol. 13, p. 74, Dec. 2019.

[11] W. Williams, "Neomano Glove," *Bionics for Everyone*." [Online]. Available: https://bionicsforeveryone.com/neomano-glove/. [Accessed: May 8, 2025].

[12] I. M. Bullock, J. Borras, and A. M. Dollar, "Assessing assumptions in kinematic hand models: A review," in *2012 4th IEEE RAS and EMBS International Conference on Biomedical Robotics and Biomechatronics (BioRob)*, Rome, Italy: IEEE, Jun. 2012, pp. 139–146.

Appendix

Arduino IDE code-

```
#include <Wire.h>
#include <LiquidCrystal_I2C.h>
#include <Servo.h>

Servo myservo1;
Servo myservo2;

#define outputA 6  // CLK
#define outputB 7  // DT
#define modeButton 8

LiquidCrystal_I2C lcd(0x27, 16, 2); // I2C address 0x27, 16x2 display

int pos = 90; // Initial servo position
int aState;
int aLastState;
int sens = 60;
bool manualMode = true;
bool lastButtonState = HIGH;
const int step = 3;
const int delayMs = 20;
void setup() {
  pinMode(outputA, INPUT);
  pinMode(outputB, INPUT);
  pinMode(modeButton, INPUT_PULLUP); // Use internal pull-up

  lcd.init();
  lcd.backlight();
  lcd.clear();
  myservo1.attach(9);
  myservo2.attach(10);
  aLastState = digitalRead(outputA);
  myservo1.write(pos);
  myservo2.write(180 - pos);
  updateLCDMode();
  if (manualMode) updatePositionDisplay(pos);
}

void loop() {
  checkButtonPress();
```

```
  if (manualMode) {
    handleManualMode();
  } else {
    handleAutoMode();
  }
}

void checkButtonPress() {
  bool currentButton = digitalRead(modeButton);
  if (lastButtonState == HIGH && currentButton == LOW) {
    delay(50);  // Debounce
    manualMode = !manualMode;
    lcd.clear();
    updateLCDMode();
    if (manualMode) updatePositionDisplay(pos);
    else lcd.setCursor(0, 1), lcd.print("                "); 
    delay(300); // Prevent double toggle
  }
  lastButtonState = currentButton;
}

void handleManualMode() {
  aState = digitalRead(outputA);
  if (aState != aLastState) {
    if (digitalRead(outputB) != aState) {
      pos += sens;
    } else {
      pos -= sens;
    }

    if (pos < 0) pos = 0;
    if (pos > 180) pos = 180;

    myservo1.write(pos);
    myservo2.write(180 - pos);

    updatePositionDisplay(pos);
  }
  aLastState = aState;
}

void handleAutoMode() {
  for (int i = 0; i <= 180; i += step) {
    if (digitalRead(modeButton) == LOW) {
      delay(50);
```

```
      manualMode = true;
      lcd.clear();
      updateLCDMode();
      updatePositionDisplay(i);
      delay(300);
      return;
    }
    myservo1.write(i);
    myservo2.write(180 - i);
    delay(delayMs);
  }

  for (int i = 180; i >= 0; i -= step) {
    if (digitalRead(modeButton) == LOW) {
      delay(50);
      manualMode = true;
      lcd.clear();
      updateLCDMode();
      updatePositionDisplay(i);
      delay(300);
      return;
    }
    myservo1.write(i);
    myservo2.write(180 - i);
    delay(delayMs);
  }
}

void updateLCDMode() {
  lcd.setCursor(0, 0);
  if (manualMode) {
    lcd.print("Mode: Manual   ");
  } else {
    lcd.print("Mode: Auto     ");
  }
}

void updatePositionDisplay(int s1_angle) {
  int currentPos = 180 - s1_angle;
  lcd.setCursor(0, 1);
  lcd.print("Angle: ");
  lcd.print(currentPos);
  lcd.print("   "); // Clear leftover digits
}
```